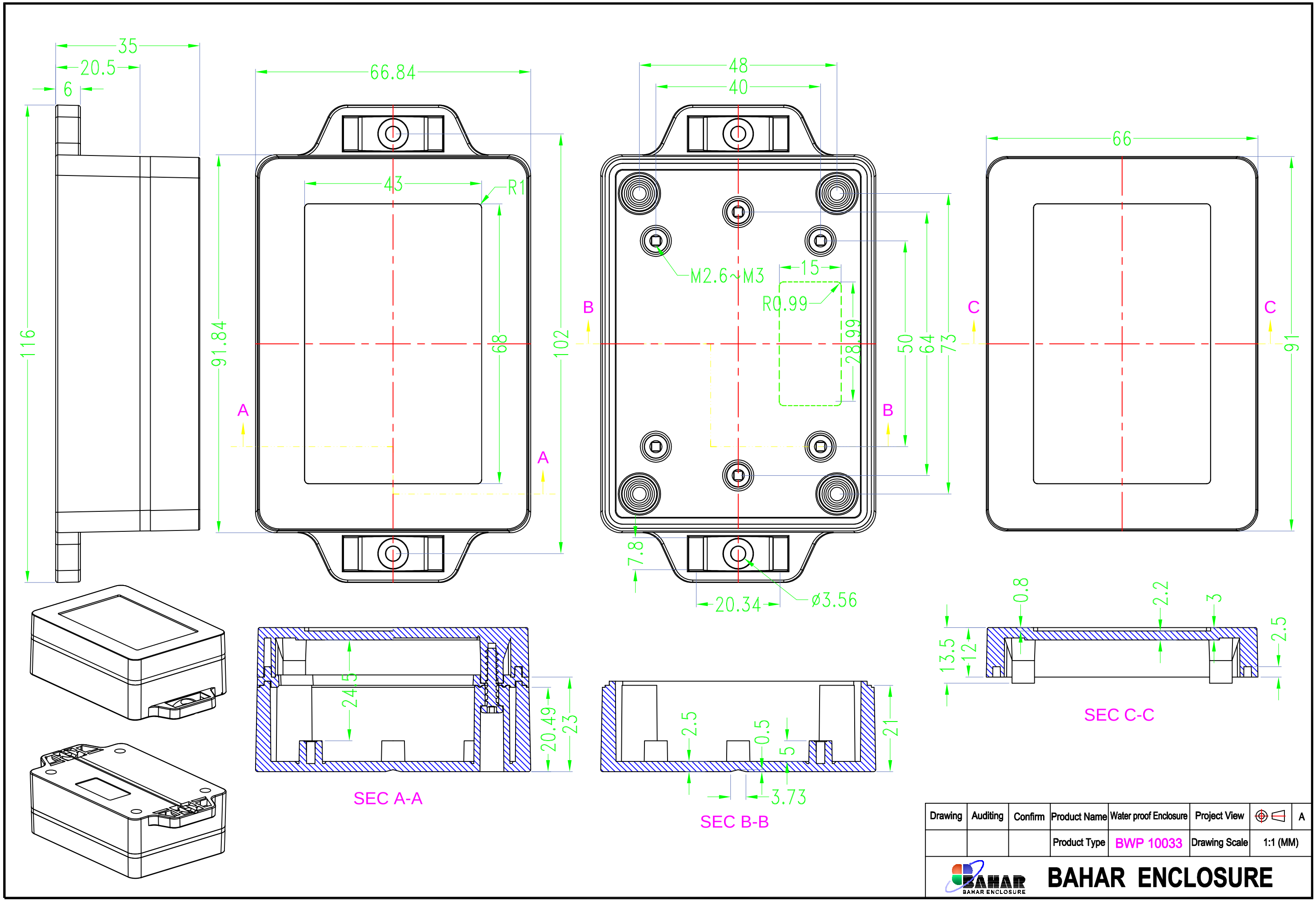
35
20.5
6
116
66.84
43
R1
91.84
68
102
A
A
48
40
M2.6~M3
15
R0.99
28.99
50
64
73
B
B
7.8
20.34
ø3.56
66
C
C
91
0.8
2.2
3
2.5
13.5
12
SEC C-C
24.5
20.49
23
SEC A-A
2.5
0.5
5
21
3.73
SEC B-B
Drawing
Auditing
Confirm
Product Name
Water proof Enclosure
Project View
A
Product Type
BWP 10033
Drawing Scale
1:1 (MM)
BAHAR
BAHAR ENCLOSURE