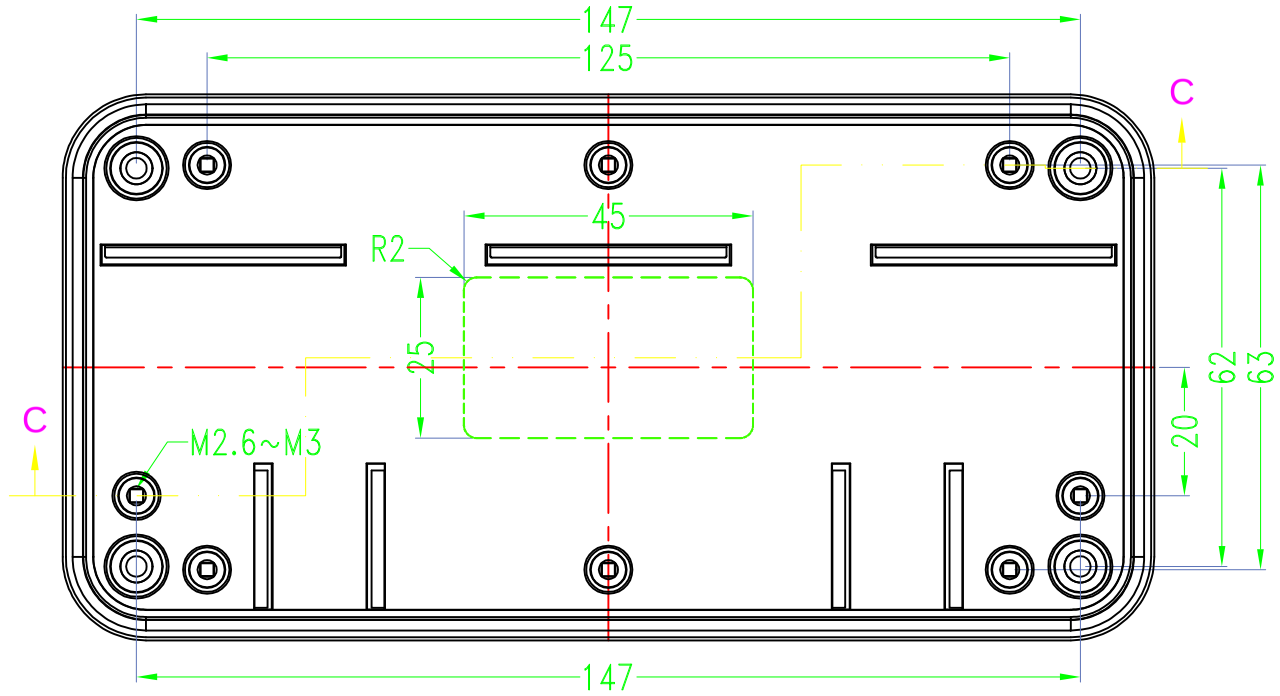

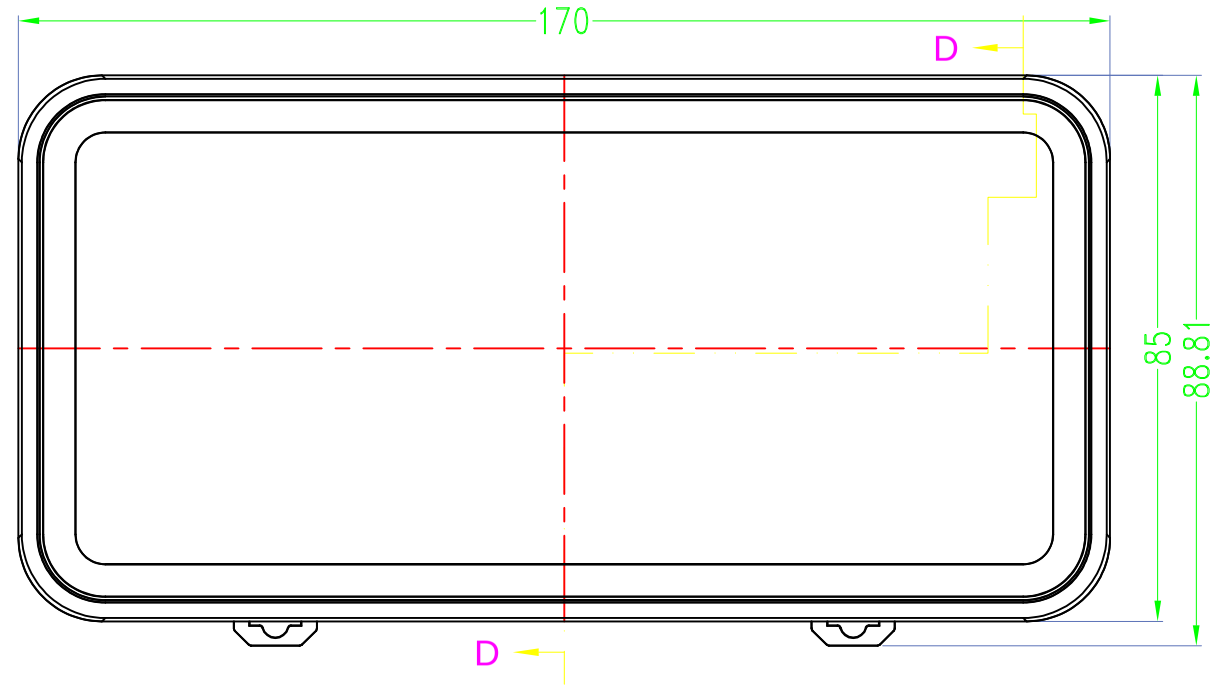

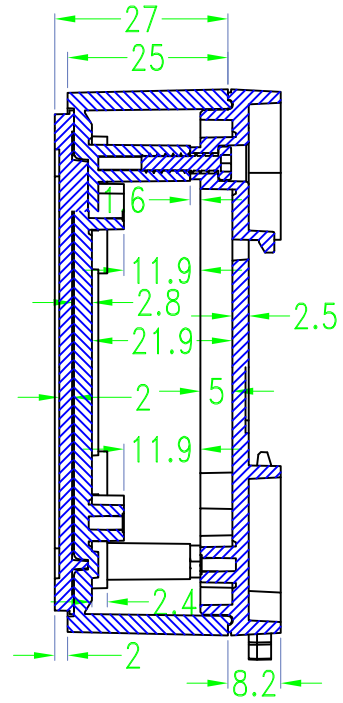

SEC D-D

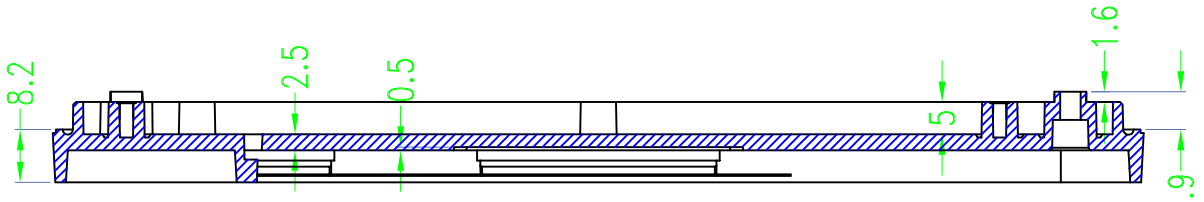

SEC C-C

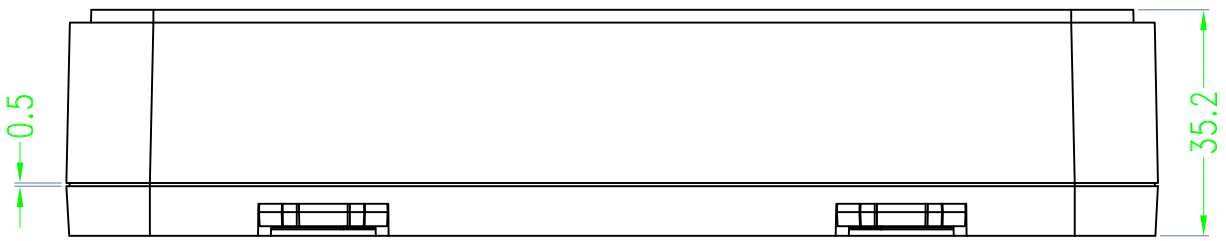

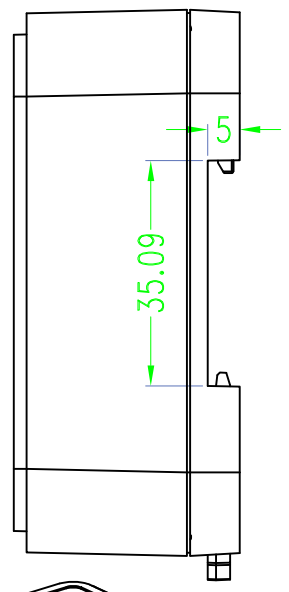

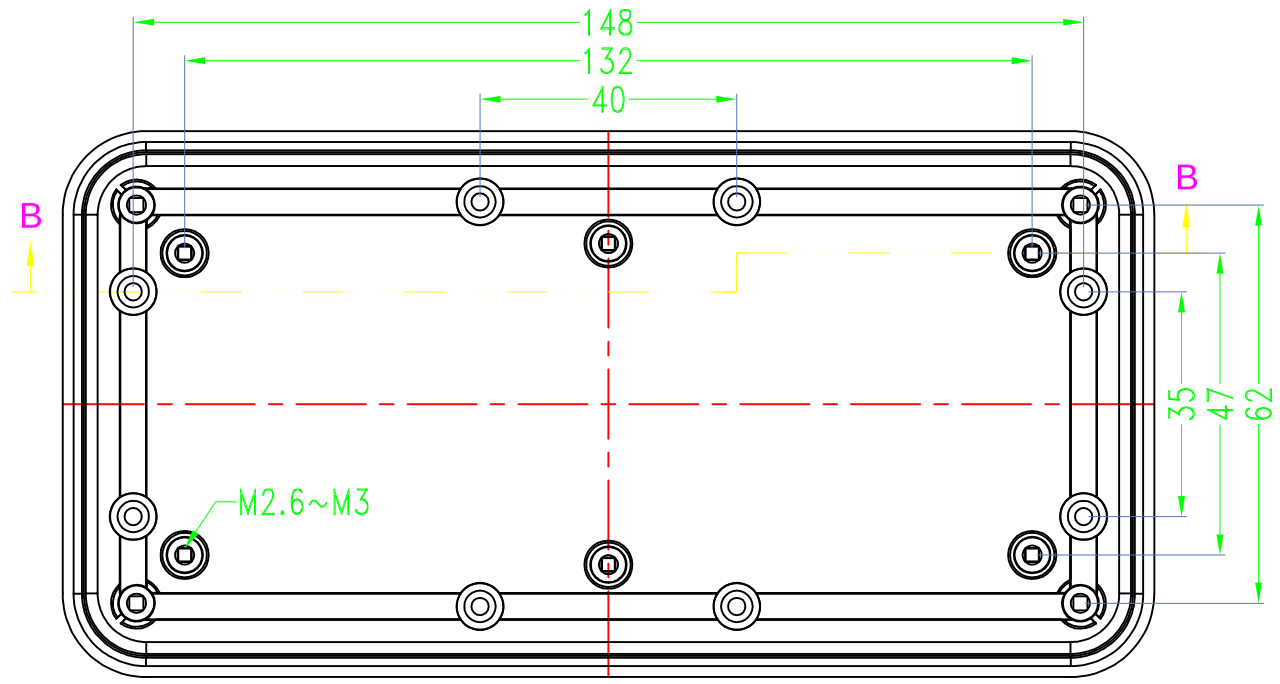

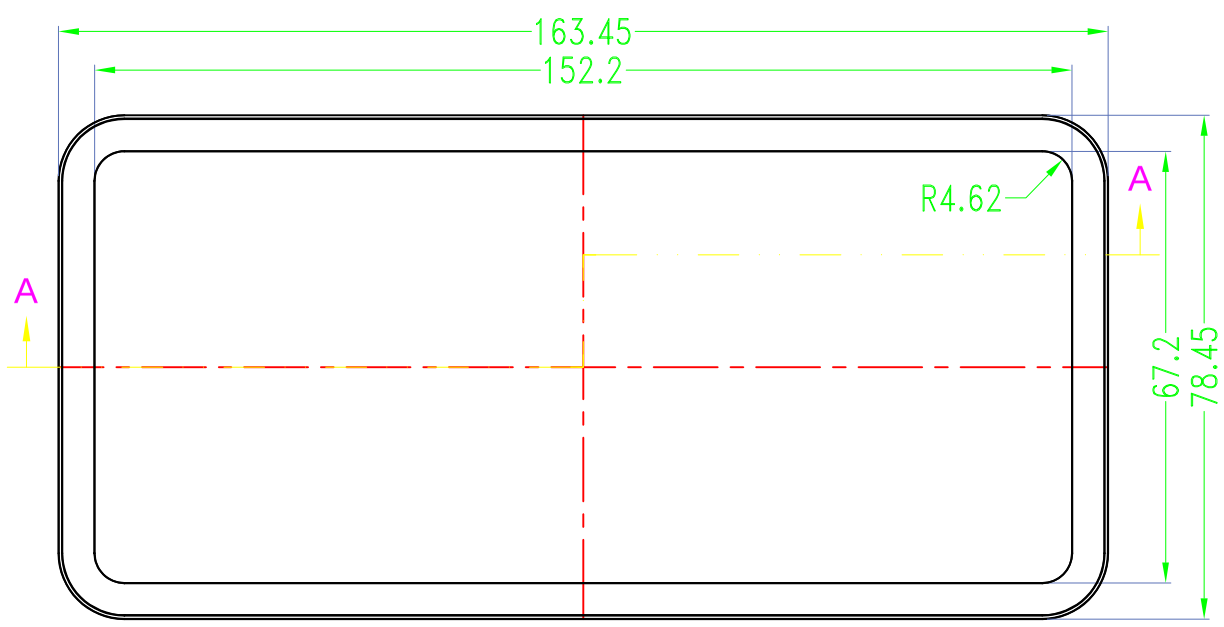

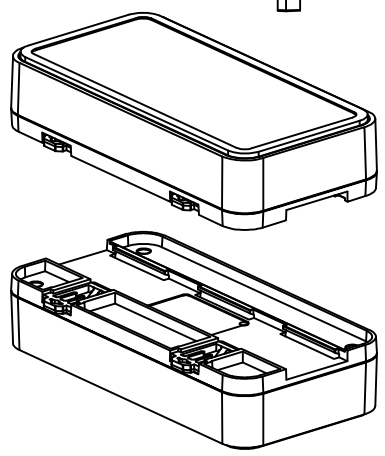

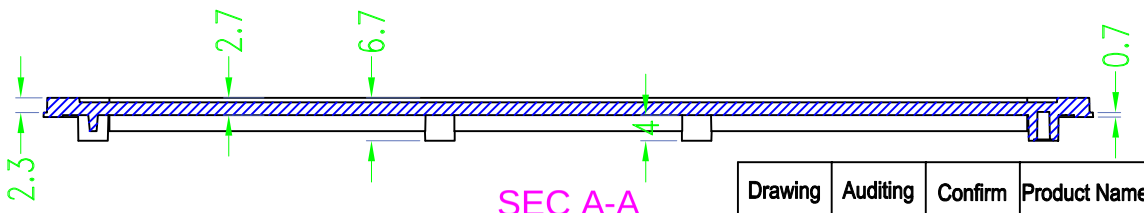

SEC A-A

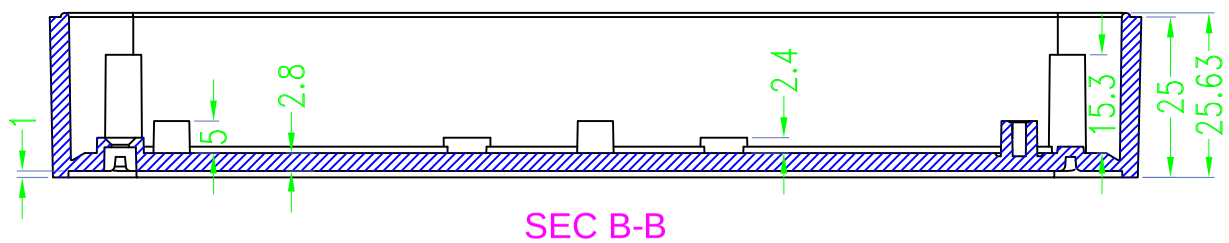

SEC B-B

Drawing	Auditing	Confirm	Product Name	Water proof Enclosure	Project View	A
			Product Type	BMD 60046-BB	Drawing Scale	1:1 (MM)

BAHAR ENCLOSURE

BAHAR ENCLOSURE