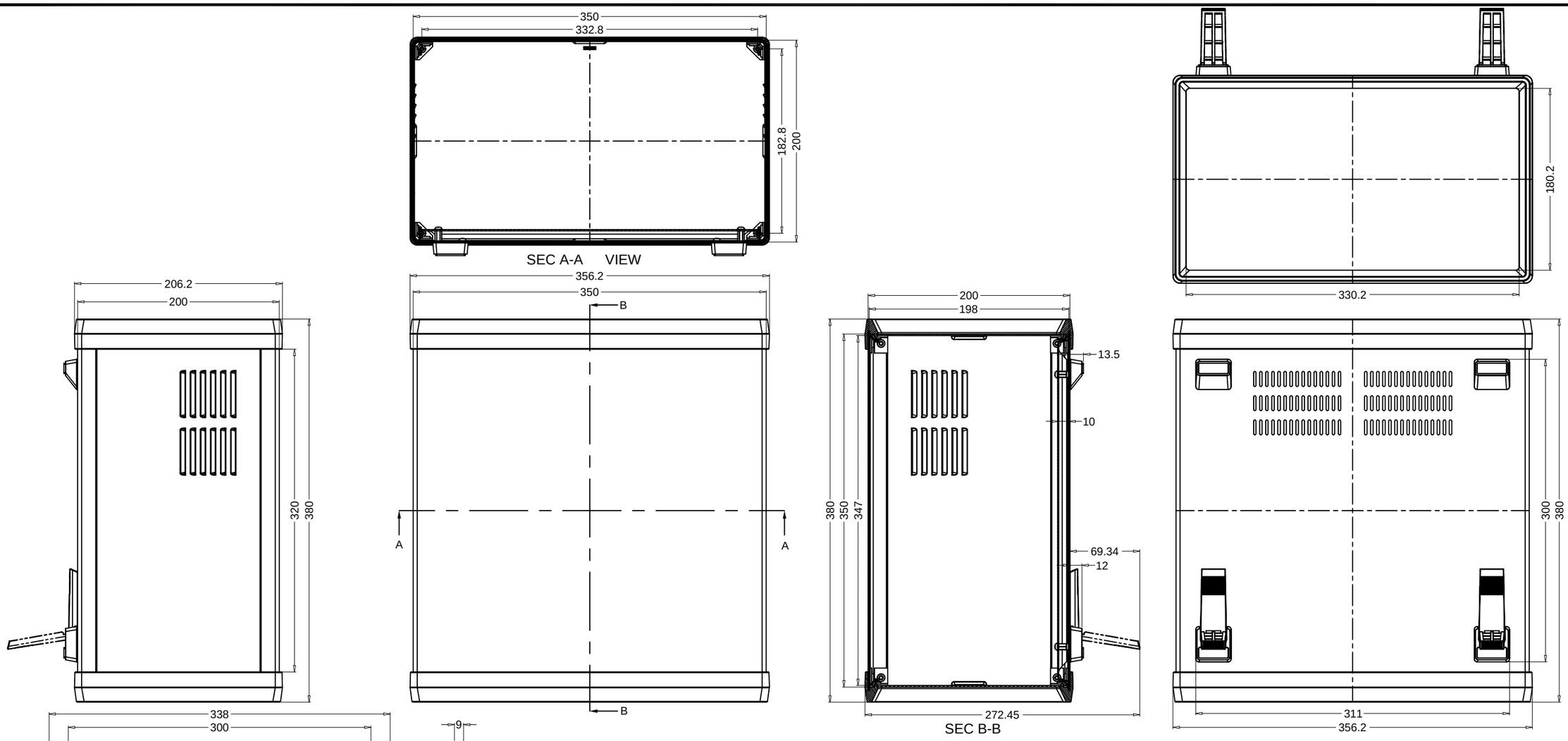

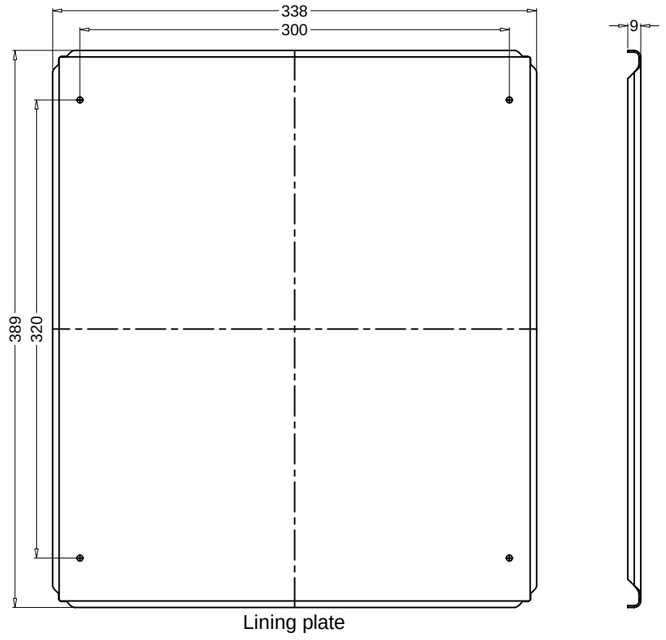

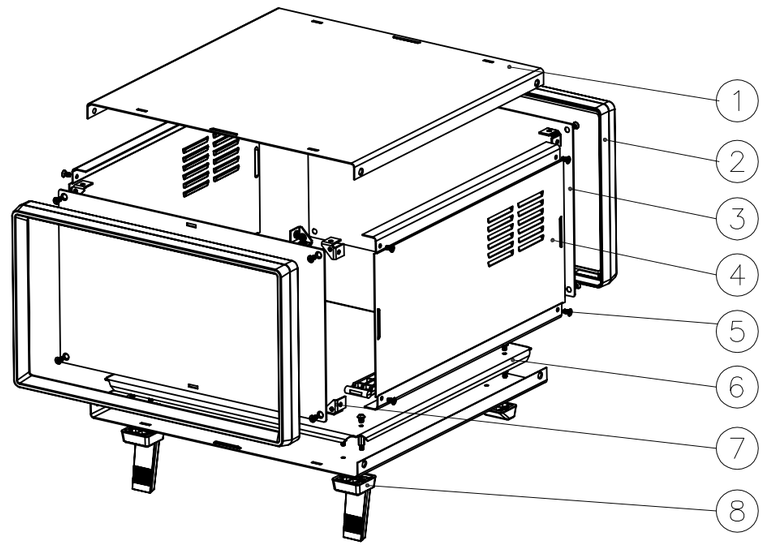

8	Tripod	ABS	1	CJ-35		
7	Bracket	STD	8	40017-F1		
6	Lining plate	AL	1	40026-C2	1.5mm	
5	Screws	STD	16	KM4x8		
4	Side plate	SECC	1+1	40026-A2	1.0mm	
3	baffle	AL	2	40026-D1	1.5mm	
2	panel	ABS	2	40026-E1		
1	Upper and lower plates	SECC	1+1	40026-B2	1.0mm	
Drawing	Auditing	Confirm	Product Name	Iron case	Project View	A
			Product Type	BDA 40026 350	Drawing Scale	1:1 (MM)

BAHAR
www.bahar-enclosure.com

BAHAR ENCLOSURE GmbH