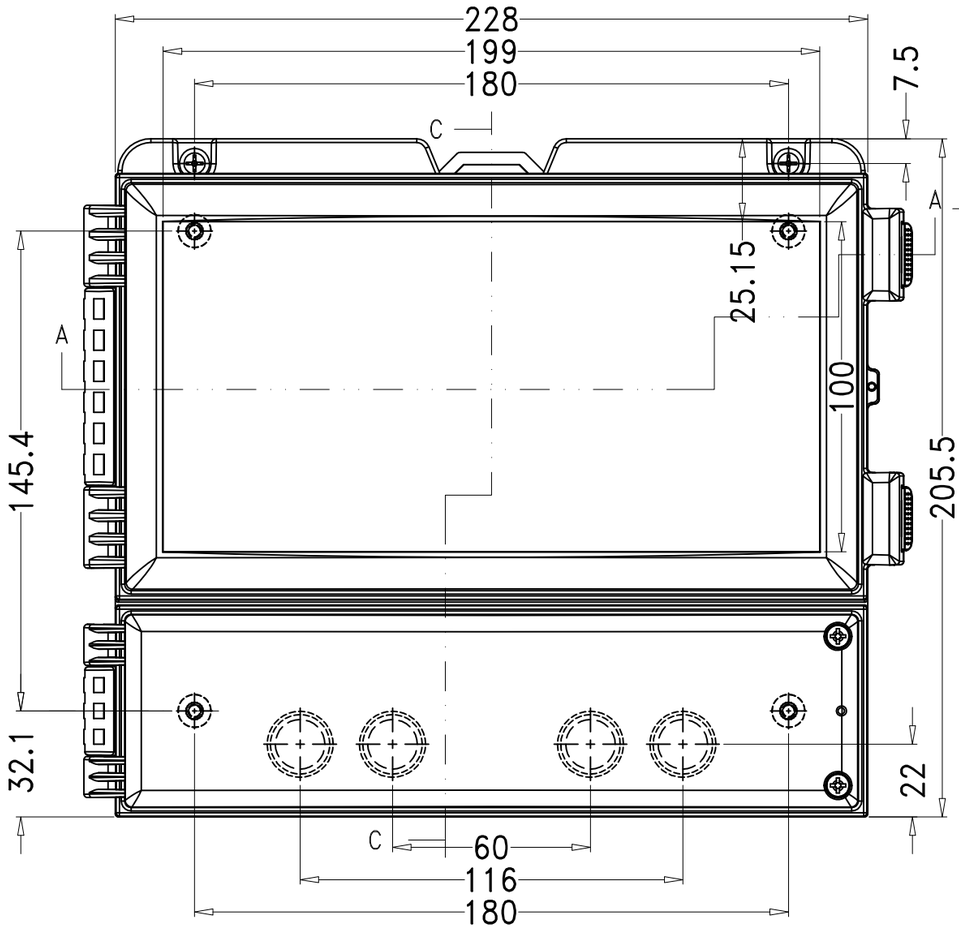

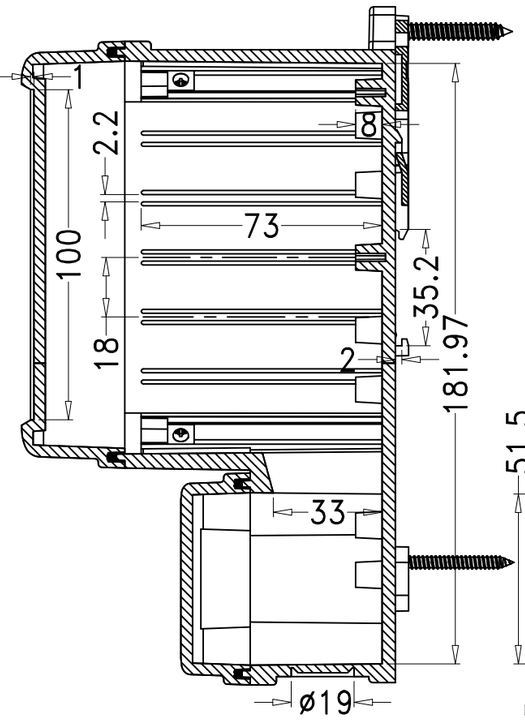

SEC C-C

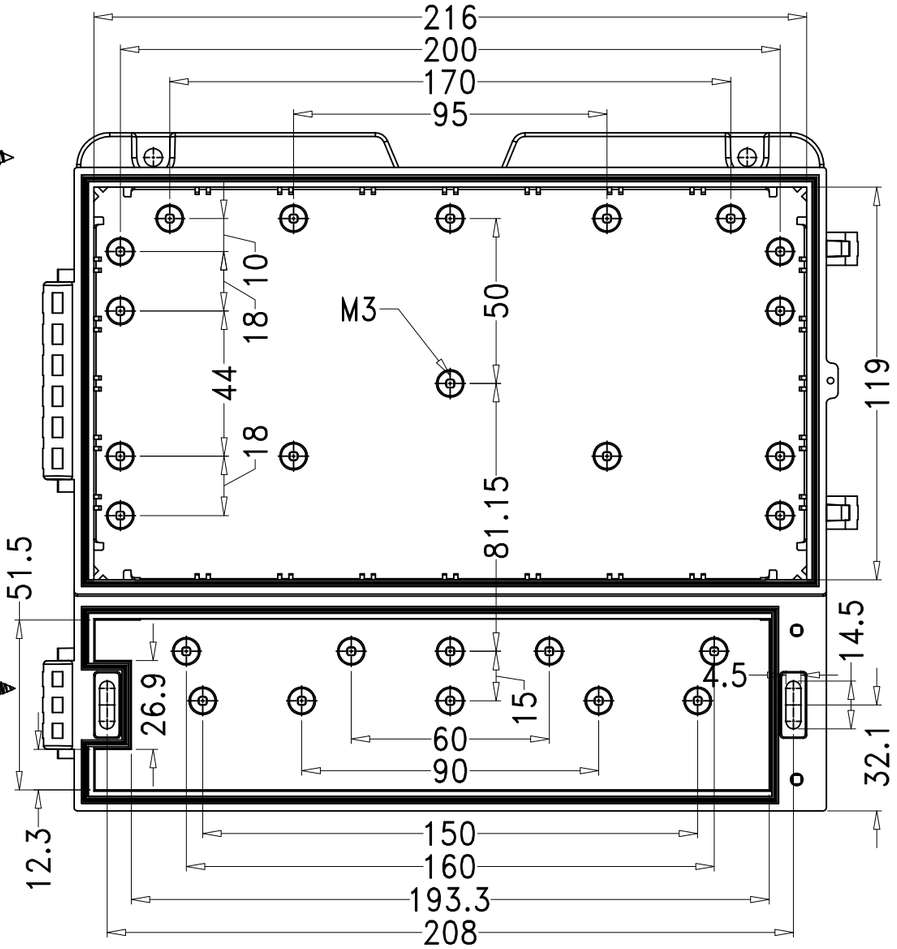

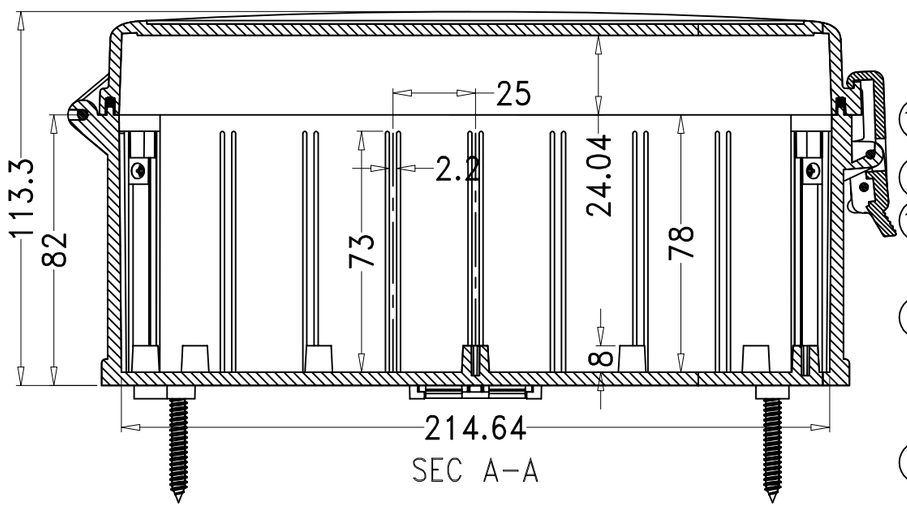

SEC A-A

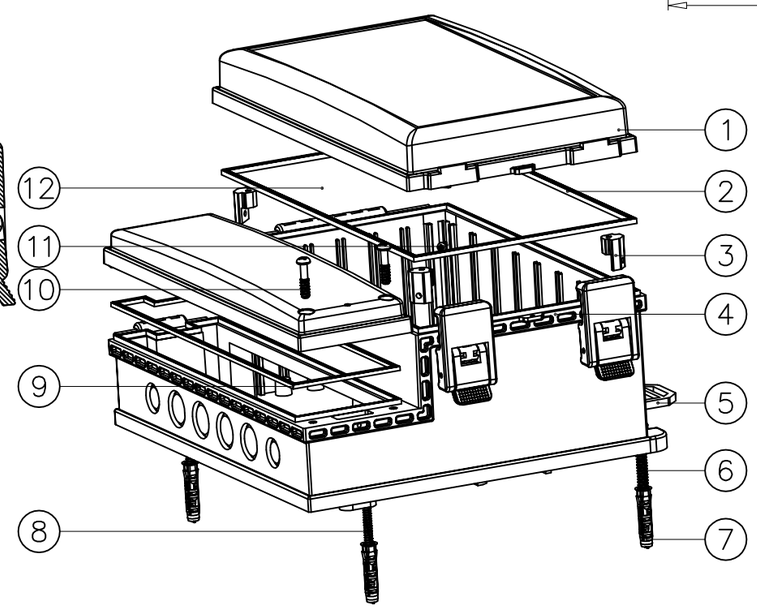

12	Shi blockade	STD	1			
11	screw	STD	2	BT3x8		
10	screw	STD	2	PB4.2x16		
9	seal ring-2	silica gel	1	10802-D1		
8	screw	STD	2	PA4x40		
7	Wall nail	PP	4	S-6		
6	screw	STD	2	BA5x40		
5	Buckle	POM	1	10801-F1		
4	bottom cover	ABS	1	10802-B1		
3	parts	ABS	4	10801-E1		
2	seal ring-1	silica gel	1	10802-C1		
1	Uppre cover	ABS	1	10802-A1		
Drawing	Auditing	Confirm	Product Name	Water proof Enclosure	Project View	A
			Product Type	BWP 10802	Drawing Scale	1:1 (MM)

www.bahar-enclosure.com **BAHAR ENCLOSURE GmbH**