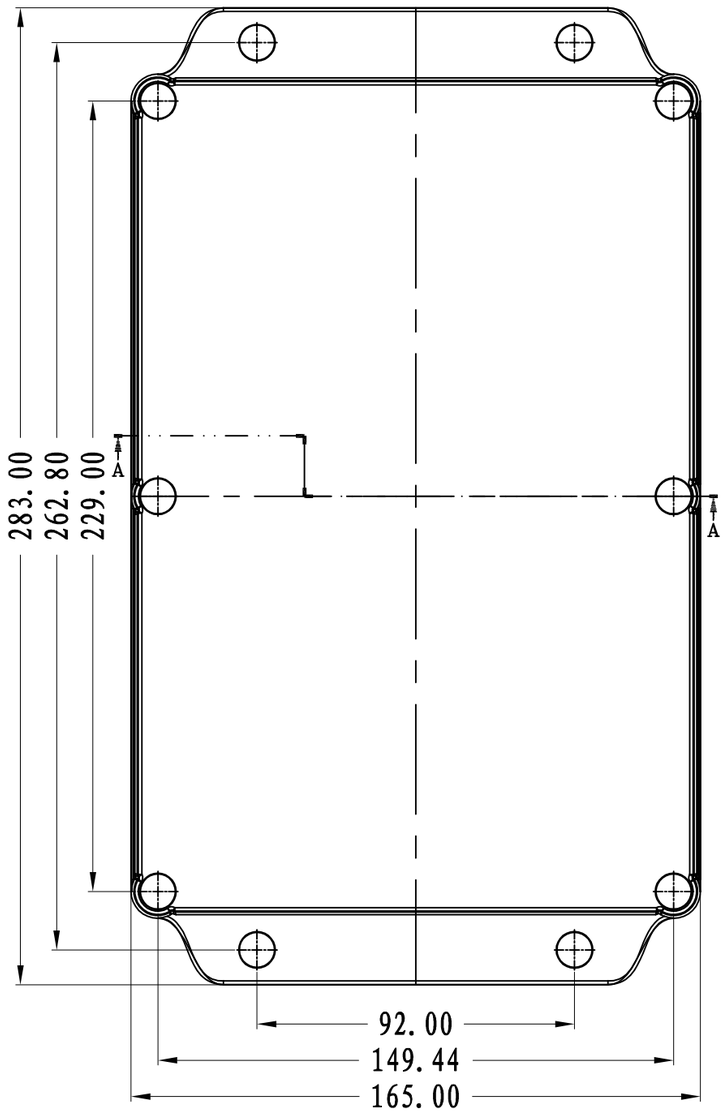

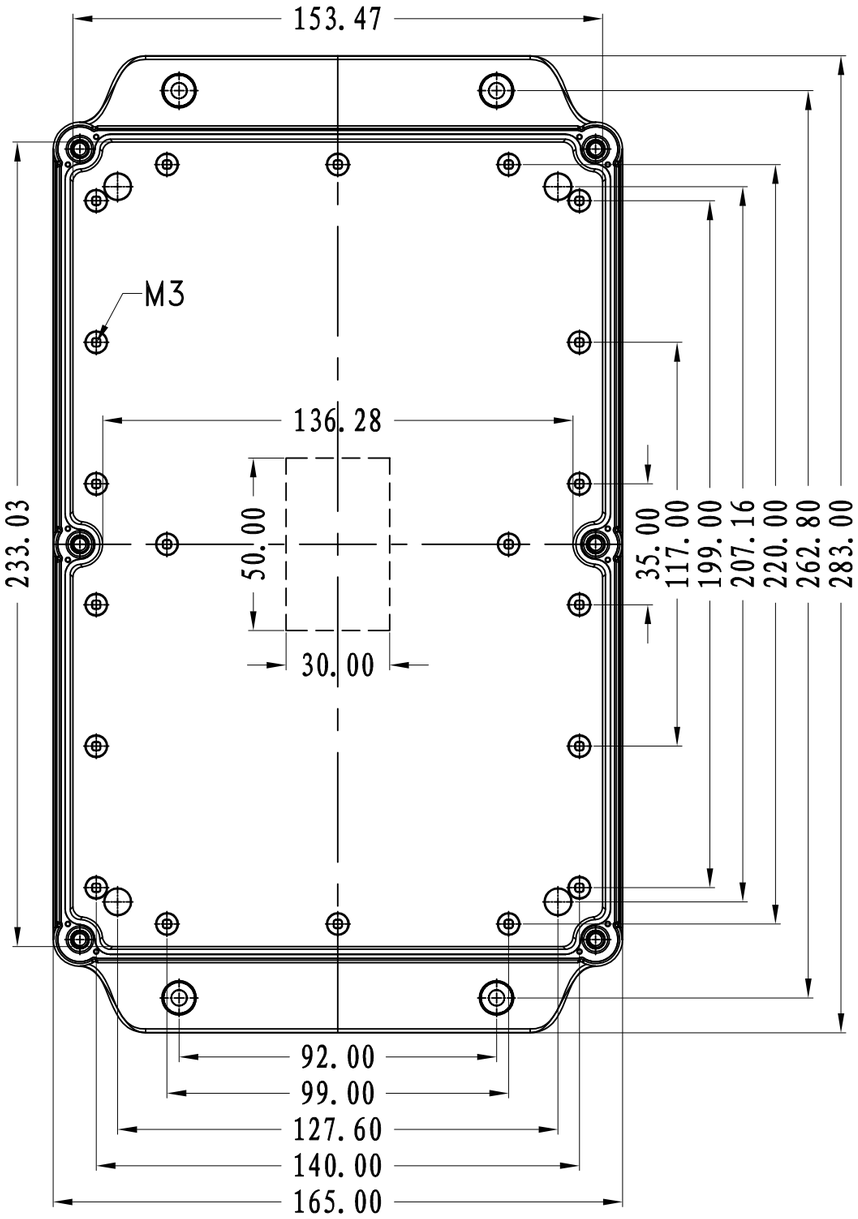

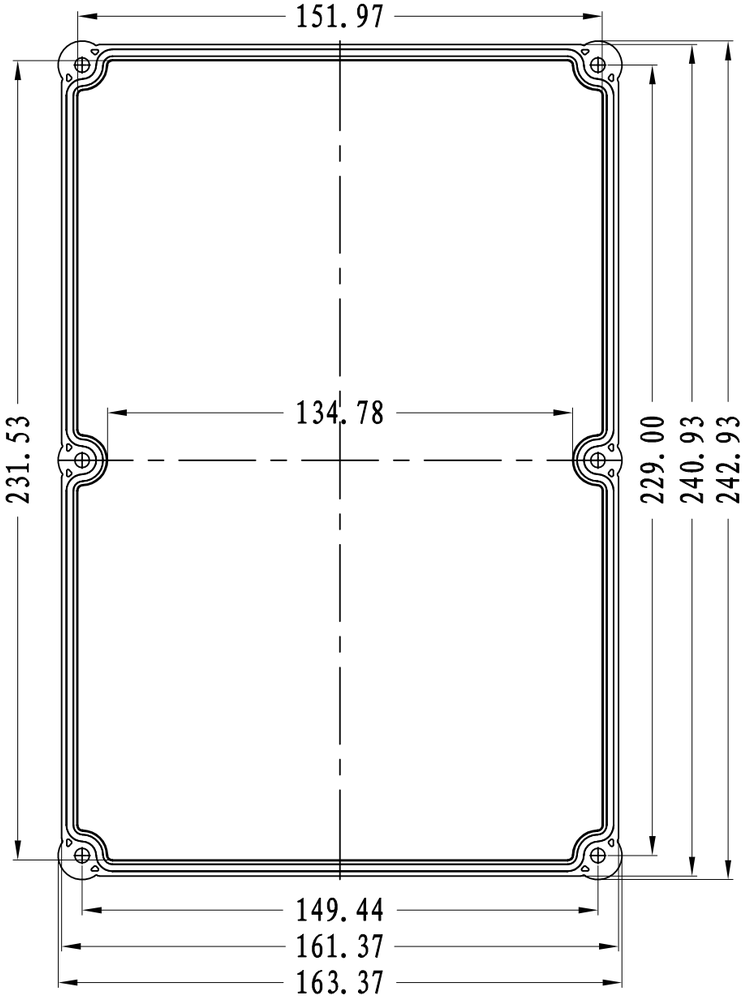

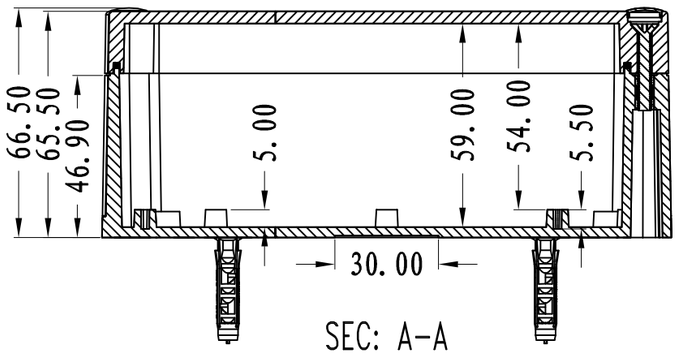

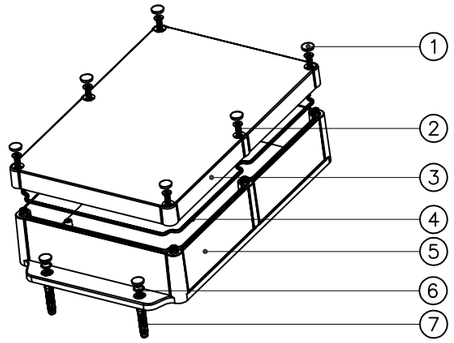

7	Wall nail	PP	4	S-6		
6	screws	STD	4	PWA4X30		
5	bottom cover	ABS	1	10020-B1		
4	seal ring	silica gel	1	10020-C1		
3	Uppre cover	ABS	1	10020-A1		
2	screws	STD	6	KM4X25		
1	Screw cap	ABS	10	KN-500-A1		
Drawing	Auditing	Confirm	Product Name	Water proof Enclosure	Project View	A
			Product Type	BWP 10020	Drawing Scale	1:1 (MM)

BAHAR
www.bahar-enclosure.com

BAHAR ENCLOSURE GmbH